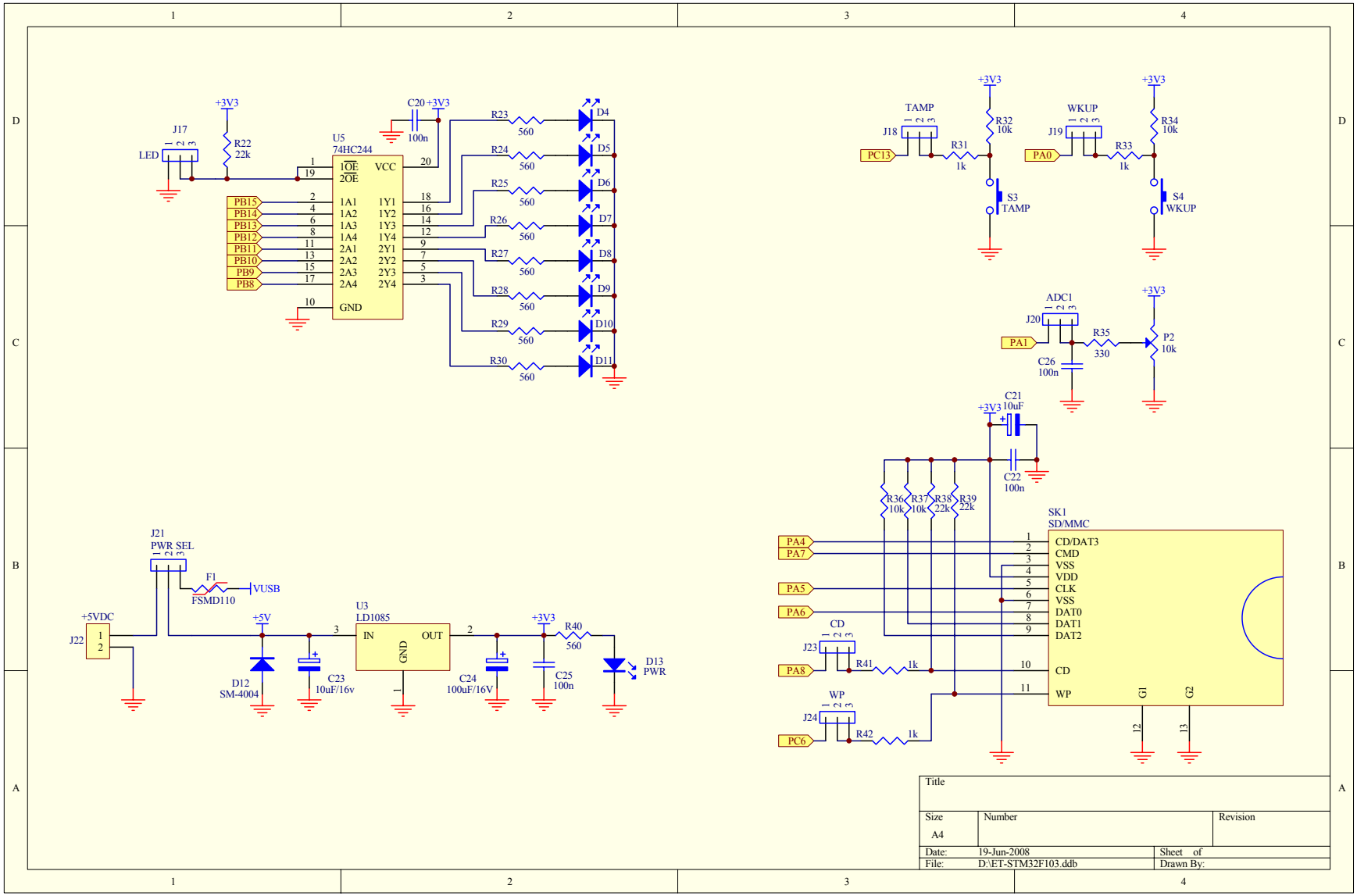
J17
LED
+3V3
R22
22k
U5
74HC244
C20
100n
+3V3
1OE
2OE
VCC
GND
1A1
1A2
1A3
1A4
2A1
2A2
2A3
2A4
1Y1
1Y2
1Y3
1Y4
2Y1
2Y2
2Y3
2Y4
PB15
PB14
PB13
PB12
PB11
PB10
PB9
PB8
R23
R24
R25
R26
R27
R28
R29
R30
560
D4
D5
D6
D7
D8
D9
D10
D11
TAMP
J18
PC13
R31
1k
R32
10k
S3
TAMP
WKUP
J19
PA0
R33
1k
R34
10k
S4
WKUP
ADC1
J20
PA1
R35
330
P2
10k
C26
100n
C21
10uF
C22
100n
R36
10k
R37
10k
R38
22k
R39
22k
SK1
SD/MMC
CD/DAT3
CMD
VSS
VDD
CLK
VSS
DAT0
DAT1
DAT2
CD
WP
G1
G2
PA4
PA7
PA5
PA6
CD
J23
PA8
R41
1k
WP
J24
PC6
R42
1k
J21
PWR SEL
F1
FSMD110
VUSB
+5VDC
J22
+5V
D12
SM-4004
C23
10uF/16v
U3
LD1085
IN
OUT
GND
C24
100uF/16V
+3V3
C25
100n
R40
560
D13
PWR
Title
Size
A4
Number
Revision
Date:
19-Jun-2008
Sheet of
File:
D:\ET-STM32F103.ddb
Drawn By: